TOYOTA YARIS 2022 ATIV SEDAN

1 FR BUMPER W/FINISHER

2 HOOK HOLE COVER

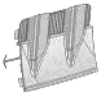

3 GRILLE BASE BK

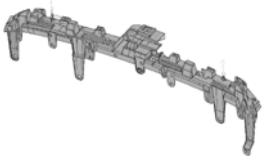

4 GRILLE MOULDING

5 REAR BUMPER WITH LOWER PANEL

6 FOG LAMP COVER

7 FRONT BUMPER BRACKET

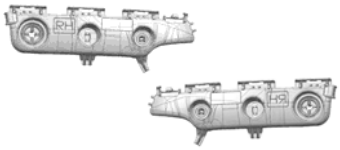

8 FRONT INNER FENDER

9 REAR BUMPER BRACKET

10 REAR MOULDING COVER

11 REAR BUMPER REFLECTOR

NO	CODE	DESCRIPTION	MODEL	YEAR	OEM	PCS	NW	GW	M3	PART LINK
1	TYB481 NA	FR BUMPER W/FINISHER	YARIS ATIV	'22-'23	52119-BZ911(B)	1	5.00	5.50	0.0600	
					53112-BZ320-C0(BF)					
2	TYB481SP NA	HOOK HOLE COVER	YARIS ATIV	'22-'23	52721-BZ120-C0	1	0.15	0.15	0.0050	
3	TYG481 NA	GRILLE BASE BK	YARIS ATIV	'22-'23	53114-BZ010	5	1.50	2.00	0.0200	
4	TYGM481 NA	GRILLE MOULDING	YARIS ATIV	'22-'23	53111-BZ666-C0	5	2.00	2.50	0.0200	
5	TYB482 NA	REAR BUMPER WITH LOWER PANEL	YARIS ATIV	'22-'23	52159-BZ901(B)	1	4.50	4.80	0.0600	
					52169-BZ140(P)					
6	TYFC481 LA	FOG LAMP COVER LH	YARIS ATIV	'22-'23	52128-BZ420-C0	5	1.50	2.00	0.0200	
	TYFC481 RA	FOG LMAP COVER RH	YARIS ATIV	'22-'23	52127-BZ460-C0	5	1.50	2.00	0.0200	
7	TYBS481 LA	FRONT BUMPER BRACKET LH	YARIS ATIV	'22-'23	52536-BZ010	1	0.15	0.15	0.0050	
	TYBS481 RA	FRONT BUMPER BRACKET RH	YARIS ATIV	'22-'23	52535-BZ010	5	1.50	2.00	0.0200	
8	TYIF481 LA	FRONT INNER FENDER LH	YARIS ATIV	'22-'23	53806-BZ120	10	10.00	11.00	0.0600	
	TYIF481 RA	FRONT INNER FENDER RH	YARIS ATIV	'22-'23	53805-BZ120	10	10.00	11.00	0.0600	
9	TYBS482 LA	REAR BUMPER BRACKET LH	YARIS ATIV	'22-'23	52576-BZ010	1	0.35	0.35	0.0010	
	TYBS482 RA	REAR BUMPER BRACKET RH	YARIS ATIV	'22-'23	52575-BZ010	1	0.35	0.35	0.0010	
10	TYFC482 LA	REAR MOULDING COVER LH	YARIS ATIV	'22-'23	52573-BZ160-B0	1	0.35	0.35	0.0200	
	TYFC482 RA	REAR MOULDING COVER RH	YARIS ATIV	'22-'23	52752-BZ160-B0	1	0.35	0.35	0.0200	
11	TYBL482 LA	REAR BUMPER REFLECTOR LH	YARIS ATIV	'22-'23	81920-BZ300	50	7.00	7.50	0.0200	
	TYBL482 RA	REAR BUMPER REFLECTOR RH	YARIS ATIV	'22-'23	81910-BZ300	50	7.00	7.50	0.0200	

TOYOTA YARIS 2022 ATIV SEDAN

1 FENDER W/O SIDE LAMP HOLE

2 FENDER W/SIDE LAMP HOLE

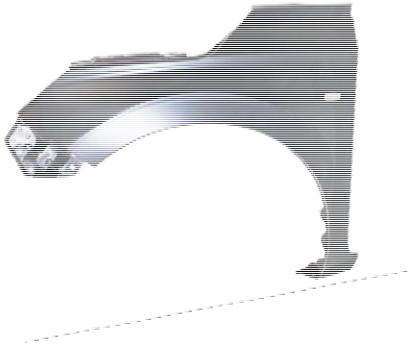

3 HOOD

4 HEAD LAMP

5 HEAD LAMP LED

6 TAIL LAMP HALOGEN

7 TAIL LAMP W/ONE LED

8 TAIL GATE/TRUNK LID

NO	CODE	DESCRIPTION	MODEL	YEAR	OEM	PCS	NW	GW	M3	PART LINK
1	TYF481 LA	FENDER W/O SIDE LAMP HOLE LH	YARIS SEDAN	'22	53812-BZ620	1	5.00	6.00	0.0300	
	TYF481 RA	FENDER W/O SIDEN LAMP RH	YARIS SEDAN	'22	53811-BZ620	1	5.00	6.00	0.0300	
2	TYF481 LB	FENDER W/SIDE LAMP HOLE LH	YARIS SEDAN	'22	53812-BZ640	1	5.00	6.00	0.0300	
	TYF481 RB	FENDER W/SIDE LAMP HOLE RH	YARIS SEDAN	'22	53811-BZ640	1	5.00	6.00	0.0300	
3	TYH481 NA	HOOD	YARIS SEDAN	'22	53301-BZ430	1	15.00	16.00	0.0600	
4	TYHL481 LA	HEAD LAMP LH	YARIS SEDAN	'22	81150-BZB30	1	8.00	9.00	0.0200	
	TYHL481 RA	HEAD LAMP RH	YARIS SEDAN	'22	81110-BZB30	1	8.00	9.00	0.0200	
5	TYHL481 LB	HEAD LAMP LED LH	YARIS SEDAN	'22	81150-BZ860(SA)	1	8.00	9.00	0.0200	
	TYHL481 RB	HEAD LAMP LED RH	YARIS SEDAN	'22	81110-BZ860(SA)	1	8.00	9.00	0.0200	
6	TYL481 LA	TAIL LAMP HALOGEN LH	YARIS SEDAN	'22	81560-BZ640	10	11.00	12.00	0.0400	
	TYL481 RA	TAIL LAMP HALOGEN RH	YARIS SEDAN	'22	81550-BZ640	10	11.00	12.00	0.0400	
7	TYL481 LB	TAIL LAMP W/ONE LED LH	YARIS SEDAN	'22	81560-BZ620	10	11.00	12.00	0.0400	
	TYL481 RB	TAIL LAMP W/ONE LED RH	YARIS SEDAN	'22	81550-BZ620	10	11.00	12.00	0.0400	
8	TYT481 NA	TAIL GATE/TRUNK LID	YARIS SEDAN	'22	64401-BZ090	1	11.00	12.00	0.0400	